ALTEC LANSING

HIGH-FREQUENCY AND COMPRESSION DRIVERS

Reg. U.S. Pat. Nos.
D239,537
D239,539
3,967,367

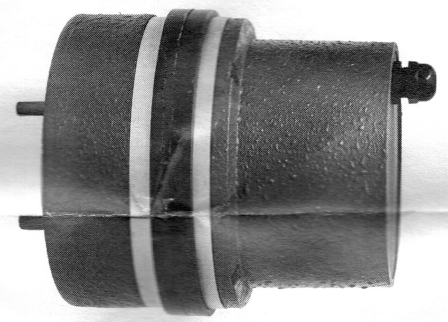

290 Series

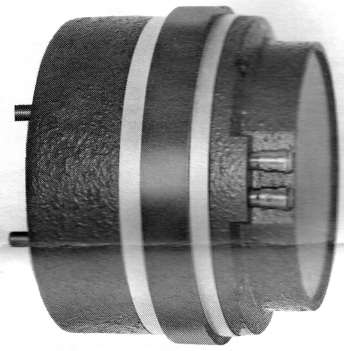

288/291 Series

INSTALLATION AND SERVICE INSTRUCTIONS FOR

288-8K HIGH-FREQUENCY DRIVER
288-16K HIGH-FREQUENCY DRIVER
290-8K COMPRESSION DRIVER
290-16K COMPRESSION DRIVER
291-16K HIGH-FREQUENCY DRIVER

Table I. Gasket Specifications

Gasket No.	Altec No.	O.D.	I.D.	Thickness
1	20466	2″	2.406″	0.016″
3	21270	2″	1.406″	0.125″

NOTE: Gaskets are supplied with adaptors and drivers.

DRIVER INSTALLATION

Figure 1 illustrates the options and configurations for mounting the drivers. Gaskets are supplied where required. The following recommended procedural steps describe the assembly of the horn system and installation of the drivers.

1. Connect throats and/or adaptors to horns with appropriate bolts, lockwashers and nuts supplied. Tighten all nuts evenly. Install #3 gaskets (see Table I) *only* where required:

   a. Use a #3 gasket in connecting an adaptor to a sectoral horn (see Table I).

   b. Use a #3 gasket in connecting an adaptor or throat that has a flat face with *no raised 1/16″ step* (see Table I).

2. Install driver, using either a #1 or #3 gasket. If adaptor or throat has 1/16″ raised step, use gasket #1; if adaptor or throat has a flat face with *no raised step*, use gasket #3 (see Table I).

NOTE

If 290 series driver is to be installed with an internally mounted transformer, install transformer before installing driver. Refer to section on TRANSFORMER INSTALLATION WITHIN 290 SERIES DRIVERS in these instructions.

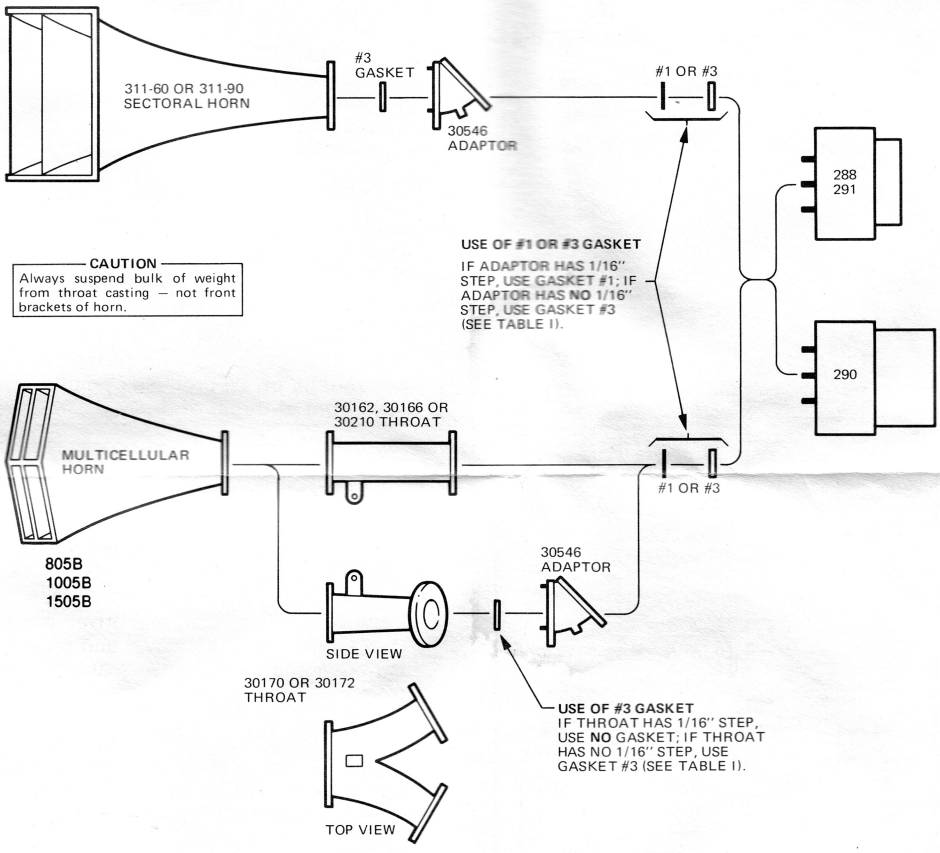

Figure 1. Mounting Options of Drivers

Copyright © 1980
Altec Corporation

1515 S. Manchester Ave., Anaheim, Calif. 92803

42-02-035036-02
LITHO IN U.S.A. 283-10M

3. Secure driver to adaptor or throat with lockwashers and nuts provided. Tighten all nuts evenly.

4. Connect transformer output (or power amplifier output) leads to driver. Be sure to observe proper polarity and correct output impedance of transformer or power amplifier. Figures 2 and 3 illustrate output impedance of Altec 15480 and 15065 transformers. Table II shows wiring connections. Driver impedances are as follows:

288-8K ..... 8 ohms
288-16K ..... 16 ohms
290-8K ..... 8 ohms
290-16K ..... 16 ohms
291-16K ..... 16 ohms

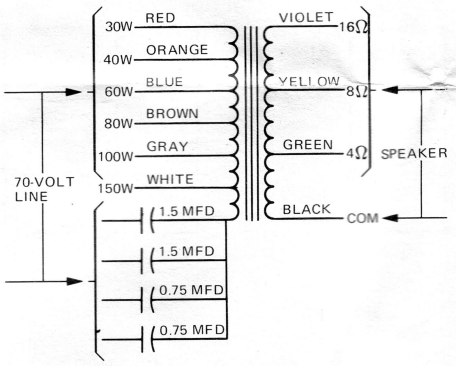

Figure 2. Altec 15480 Transformer Wiring

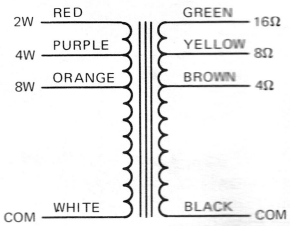

Figure 3. Altec 15065 Transformer Wiring

Table II. Connections — 15480

Desired Power (watts)	Lead Color	Low Frequency Cutoff (Hz)	Capacitors Used
100	Gray	450	All
80	Brown	500	2 large, 1 small
80	Brown	350	All
60	Blue	500	2 large
60	Blue	300	All
40	Orange	500	1 large, 1 small
40	Orange	300	2 large
30	Red	300	1 large, 1 small

To connect output leads to 290 series, refer to details of Figure 4:

a. Remove screws securing cover and lift off cover and gasket.

b. Pass output leads through rubber gland of connector, through driver cover. Leave sufficient lead length (approximately 18 inches) to facilitate installation and tighten connector to seal gland.

c. Connect stripped ends of black and white wires to output leads, using wire nuts.

d. Connect spade terminal of black wire to L1 with terminal screw; connect space terminal of white wire to L2 with terminal screw.

NOTE

Black wire (L1) is negative (−) and white wire (L2) is positive (+). Positive voltage on L2 produces positive wave front at throat of driver.

e. Install gasket and cover. Secure with screws removed in Step 4a.

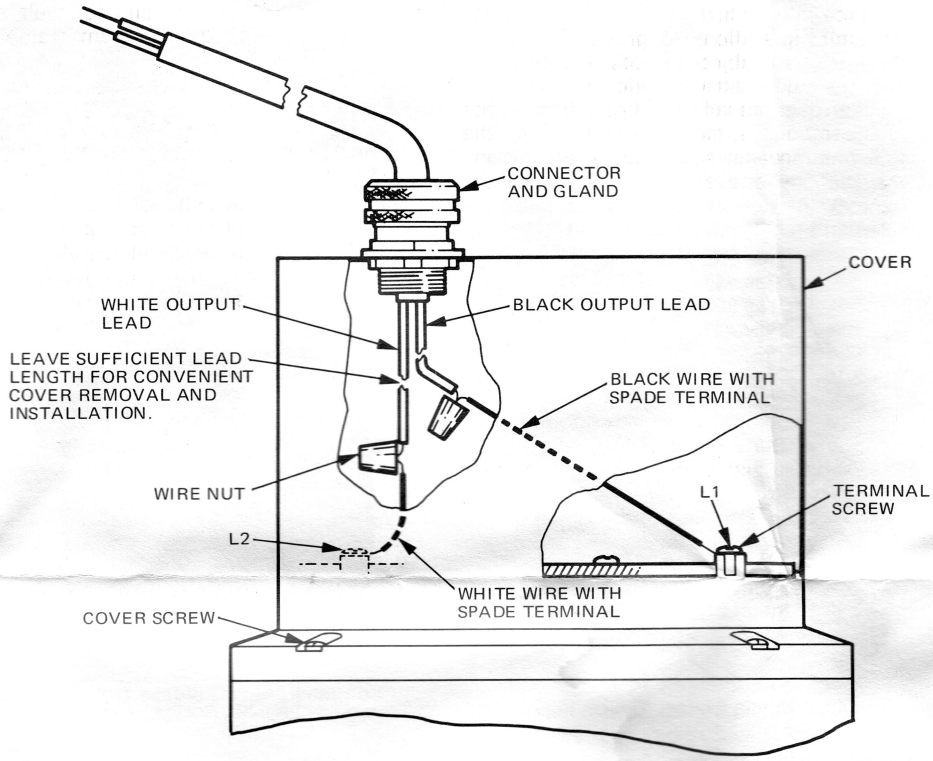

Figure 4. Wire Connections for 290 Series

TRANSFORMER INSTALLATION WITHIN 290 SERIES DRIVERS

1. Remove screws securing driver cover (see Figure 5); lift off cover and gasket. Do not loosen or remove gland fitting from cover.

2. Align transformer with appropriate mounting holes in driver; secure with screws supplied. Figure 5 illustrates a typical transformer installed.

3. Insert cable (2-conductor type SV or equal) through connector and gland, and connect to selected 70-volt line wires (see Figure 2 or 3).

4. Connect correct transformer leads to driver leads, using wire nuts. Figures 2 and 3 illustrate impedances and power ratings of Altec 15480 and 15065 transformers.

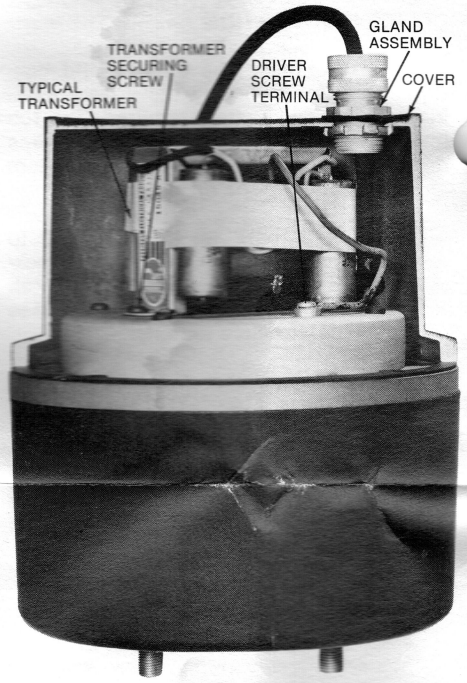

Figure 5. Altec 290 Series Driver with Typical Transformer Installed

5. Insulate end of each unused wire with tape or wire nut.

6. Install gasket and driver cover, securing with screws removed in Step 1.

PROTECTION FROM RF AND STATIC CHARGES

The 70-volt lines leading to outdoor speaker installations may develop a substantial voltage to ground at radio frequencies, due to

the proximity of high-power radio and radar transmitting stations. Ungrounded speaker lines are also subject to accumulated static charges under atmospheric conditions. A discharge in the voice coil gap, from either of these causes, may be prevented by the following means; such means are recommended whenever the speakers are mounted on an insulated support (e.g., a telephone pole or wooden tower).

1. *When the 70-volt line is 'floating'* (i.e., no ground connection exists at either side of the amplifier output to the speaker line):

   Two 0.005 μF, 200-volt ceramic capacitors should be connected from each side of the 70-volt transformer primary (mounted inside the driver cover) to the driver housing so as to bypass the 70-volt speaker line to the frame of the horn/driver assembly (see Figure 6). An accessible connection point is usually found under the mounting screws of the 70-volt transformer. The 70-volt line to each speaker array should be bypassed in this manner at one horn/driver assembly in the array. A wire, 12 gauge or larger, should be connected between each driver housing or horn frame in the speaker array. After the horn/driver assemblies are interconnected in this manner, a single wire of 12 gauge or larger should be run from the driver assembly in the speaker array to a solid earth ground — such as a water pipe. A 10,000-ohm resistor should then be connected between one of the 70-volt output terminals and ground at the amplifier output (see Figure 7).

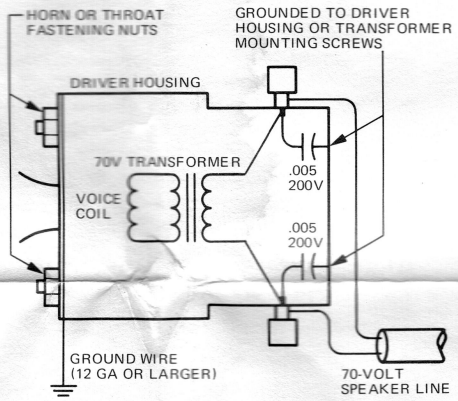

Figure 6. Preventing Damage from RF and Static Charges

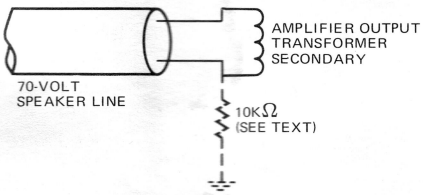

Figure 7. Grounding 70-Volt Output Terminal

2. *When the 70-volt speaker line is already grounded at the amplifier output:*

   The preceding instructions continue to apply, with regard to the RF bypass within the speaker housing itself and the grounding of the horn frame or driver housing of each horn; however, the 10,000-ohm resistor at the amplifier location may be omitted.

POWER-HANDLING CAPABILITY

Altec rates the power-handling capability of drivers in terms of *continuous power capacity*. Pink noise (constant energy per octave) is used as a test signal throughout the frequency response range of the driver because it represents an accurate indication of the heating capacity of the driver. Because this test signal includes a 10 dB crest factor, it is also an indication of the driver's transient power handling capacity. Watt of power capacity are measured on the basis of voltage times current (E × I).

Table III lists the continuous powerhandling capacity and the band-limited pink noise spectrum (frequency response range or bandwidth) for the various drivers.

Table III. Continuous (Pink Noise) Power Ratings for Altec Drivers

Power	Rated Power Bandwidth in Hertz	Watts (E × I) of Continuous Powr Capacity
288-8K	500 — 20,000	15
288-16K	500 — 20,000	15
291-16K	500 — 20,000	40
290-8K	300 — 10,000	100
290-16K	300 — 10,000	100

High-pass filters should be used for all systems that might be subjected to power demands at frequencies below the low-frequency power rating limit of the driver. Live reinforcement of modern music *requires* the use of a high-pass filter if rated power capacities are to be realized, due to the presence of significant subsonic and extreme low-frequency energy.

For two-way systems divided at 500 or 800 Hz, approximately one-half of the available power (of full-range program material) is delivered to the driver, and one-half to the low-frequency component. When combining elements in systems, a reasonable assumption is that system powerhandling capacity for program material should be predicated on the percentage of the input signal that would be imposed on the weakest element of the system, typically the HF driver. In addition, if attenuation of the driver signal is required to match sensitivity with the low-frequency component, powerhandling capacity of the driver is increased by the amount of attenuation employed.

For system applications, refer to Altec Technical Letter No. 230, "Application of Component Loudspeaker Power Capacity Ratings to the Design of Two-Way Systems."

DIAPHRAGM AND VOICE COIL REPLACEMENT

The diaphragm and voice coil assembly in HF drivers is extremely delicate and must be handled with care. Prior to starting the replacement procedure, select a work area that is clean and free from dust or chips. Cover the surface with a few layers of clean paper. The area must be free from drafts to prevent iron dust particles in suspension from being magnetically attracted to and lodged in the voice coil gap of the HF driver. Replace the diaphragm and voice coil assembly in accordance with the following procedure.

1. Remove leads from external binding posts, noting electrical phasing (polarity) as leads are removed (288 and 291 drivers). For 290 driver, disconnect cable.

2. As appropriate to installation, remove driver and/or horn from enclosures or mounting, and take removed assembly to prepared work area.

NOTE

Where easy access to driver is available, replacement procedure may be completed without removing driver and/or horn from mounting or enclosure.

3. Remove screws securing driver cover and carefully lift cover for access to interior as shown in Figure 8. The 290 driver is equipped with a covering transformer mounting plate, with or without transformer, as applicable.

Figure 8. Typical Driver with Cover Open

4. Disconnect two leads from internal binding posts (288 and 291 drivers) and set cover aside. For 290 driver, remove four screws securing transformer mounting plate; lift off plate and set cover and transformer/plate assembly aside.

CAUTION

The diaphragm is extremely delicate. Use care to prevent damage. Avoid physical contact with diaphragm. Keep screwdriver away, as strong magnetic field may attract screwdriver into diaphragm.

5. Remove six screws securing diaphragm and voice coil assembly to driver. Carefully work diaphragm and voice coil assembly free from dowel locating pins and remove assembly (see Figure 9).

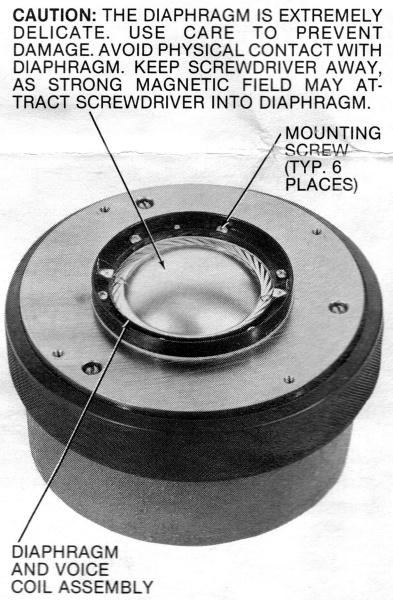

Figure 9. Diaphragm and Voice Coil Assembly Installed in Driver

6. Clean foreign material from voice coil gap with a short strip of masking tape 1-inch wide. Fold tape to form a strip with adhesive exposed on both sides. Insert edges of folded tape into gap to full depth, and wipe clean completely around circular perimeter (see Figure 10). Repeat cleaning procedure with fresh tape until tape is clean when withdrawn. Visually inspect magnetic gap to make sure it is free of foreign matter; repeat cleaning procedure as required.

Figure 10. Cleaning Voice Coil Gap

7. *Loosen* securing screw of each of two adjustable dowel locating pins until pins move freely (see Figure 11).

8. Insert spider shim into voice coil gap as shown in Figure 12. Shim No. 14-20-023963 is supplied with replacement diaphragm and voice coil assembly.

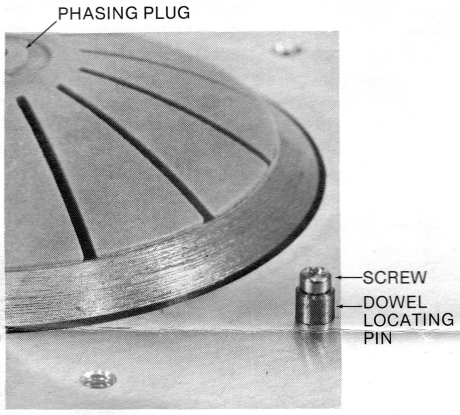

Figure 11. Adjustable Dowel Locating Pin

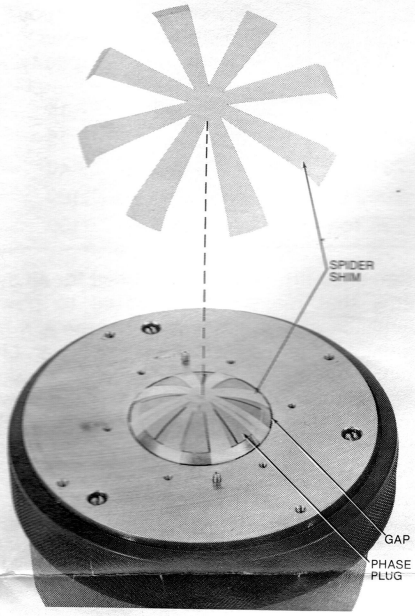

Figure 12. Spider Shim Installed into Voice Coil Gap

9. Carefully place new diaphragm and voice coil assembly on dowel locating pins. *Do not* install diaphragm screws at this time. Use care to avoid damaging edge and sides of voice coil while inserting it into voice coil gap, between shim and vertical side of top plate. The shim sets the voice coil into the precise position, while the free locating pins move to accommodate the slight adjustment needed to properly align the voice coil in the gap.

10. With new diaphragm and voice coil assembly fully inserted into position, tighten each securing screw of two dowel locating pins. This correctly centers the diaphragm and voice coil assembly.

11. Remove diaphragm and voice coil assembly.

12. Remove spider shim from gap.

13. Carefully reinstall diaphragm and voice coil assembly; install six securing screws removed in Step 5. Exercise cautions noted in Step 4 and Figure 9 in accomplishing this procedure.

14. Connect two leads of driver cover to internal binding posts (288 and 291 drivers), with red lead to post L2 and black lead to post L1. For 290 driver, position transformer/plate assembly on driver and secure with four screws removed in Step 4; then connect cable wire leads to internal terminal screws as shown in Figure 4, with black wire to terminal screw L1 and white wire to terminal screw L2.

NOTE

Be sure gasket is set in position, as shown in Figure 8, prior to connecting driver leads.

15. Install cover of driver, securing with screws removed in Step 3.

16. Return driver to service; connect external leads to binding posts according to phasing (polarity) noted in Step 1 (288 and 291 drivers). For 290 driver, reconnect cable with wire nuts as shown in Figure 4.